Development of an Automated Visibility Analysis Framework for Pavement Markings based on the Deep Learning Approach

Donghui Chen [1], Kyubyung Kang [2], Cheng Peng [1], Dan Koo [2], Taewook Kang [3*], and Jonghoon Kim [4]

[1] Department of Computer and Information Science, Indiana University-Purdue University Indianapolis (IUPUI).
[2] Department of Engineering Technology, Indiana University-Purdue University Indianapolis (IUPUI).
[3] Korea institute of Construction Technology.
[4] Department of Construction Management, University of North Florida.

Abstract

Pavement markings play a critical role in reducing crashes and improving safety on public roads.[1] As road pavements age, maintenance work for safety purposes becomes critical. However, inspecting all pavement markings at the right time is very challenging due to the lack of available human resources. This study was conducted to develop an automated condition analysis framework for pavement markings using machine learning technology. The proposed framework consists of three modules: a data processing module, a pavement marking detection module, and a visibility analysis module. The framework was validated through a case study of pavement markings training data sets in the U.S. It was found that the detection model of the framework was very precise, which means most of the identified pavement markings were correctly classified. In addition, in the proposed framework, visibility was confirmed as an important factor of driver safety and maintenance, and visibility standards for pavement markings were defined.

Results

- **Performance of Pavement Marking Detection Model**

To determine if a prediction box correctly located the target, the the mean average precision (mAP) is chosen to validate the framework. After defining the threshold of IoU, the precision-recall curve, i.e., the PR curve, can be drawn. The AP value refers to the area under the PR curve, and the mAP value indicates the average AP among the multiple categories.

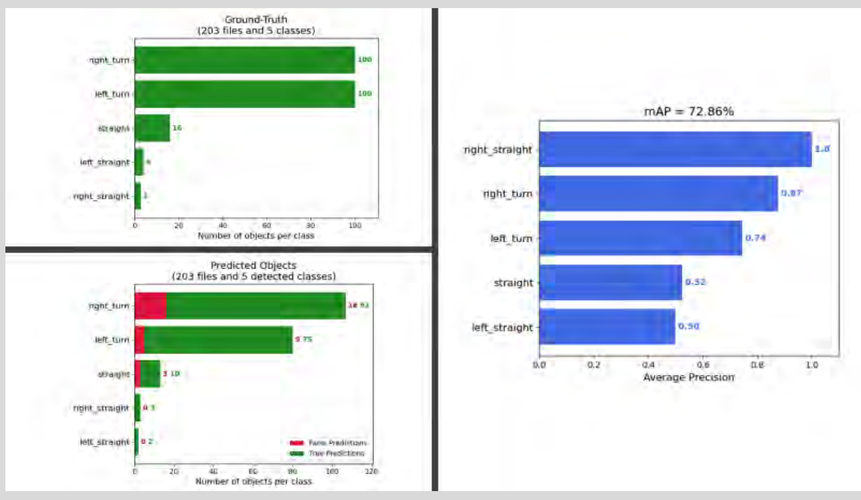

- **Model Inference**

For the inference, the testing sample images are directly fed to the model as the inputs, and then the model draws the predicted bounding boxes, and adds text to indicate the estimated category, the confidence score, and the contrast score on the image.

Conclusion

The automated condition analysis framework for pavement markings using machine learning technology is proposed in this study. The framework is validated through a case study of pavement marking training data sets in the U.S. The detection model precision of the framework is high, which means it correctly classified most of the identified pavement markings. In addition, visibility of pavement markings was defined, and visibility within the proposed framework is confirmed as an important factor of driver safety and maintenance. If the proposed study is used properly, pavement markings can be detected accurately, and their visibility can be analyzed to quickly identify places with safety concerns.

SCHOOL OF ENGINEERING AND TECHNOLOGY
IUPUI
INDIANA UNIVERSITY–PURDUE UNIVERSITY
Indianapolis

Methodology

This paper discusses a study that developed an automated condition analysis framework for pavement markings using machine learning technology. The proposed framework consists of three modules: a data processing module, a pavement marking detection module, and a visibility analysis module. The framework was validated through a case study of pavement markings training data sets in the U.S.

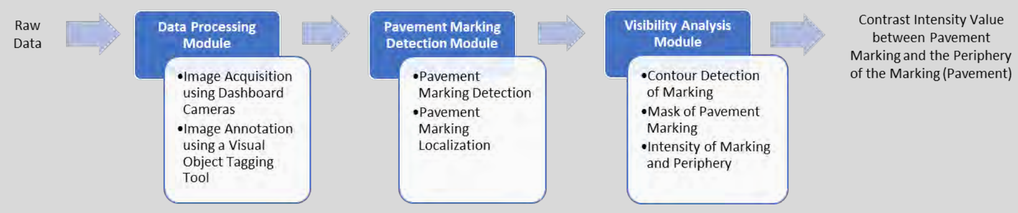

- **Data Preprocessing Module**

Since deep learning is a kind of data-driven algorithm, a training dataset must be prepared for the network model. In this study, a system for automatically gathering images or videos of pavement systems is set up by mounting an action camera behind the front windshield of the vehicle. After collecting plenty of raw data, the visual object tagging tool (VoTT)[2] is chosen to perform the data annotation. During the procedure, up to ten categories of pavement markings are captured with rectangular boxes, of which the arrow-like pavement markings are mainly concerned in this study.

- **Pavement Marking Detection Module**

This module mainly focused on how to precisely localize and classify the pavement markings in road scene images/videos. In the field of object detection, deep learning-based models gradually became the most popular techniques in recent years. Among those frameworks, the You Only Look Once (YOLO) model[3-5] is selected as the base model to accomplish the recognition task due to its high accuracy and fast execution speed.

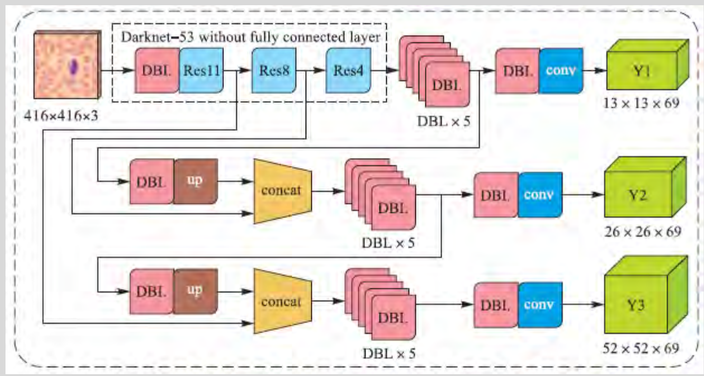

- **Visibility Analysis Module**

The goal of this section is to design a visibility analysis module to help determine the condition of the recognized pavement markings. The most significant property of pavement markings is their brightness. Considering the mechanism of human visual system, the intensity contrast is chosen as the metric for the visibility of pavement markings rather than to absolute luminance.

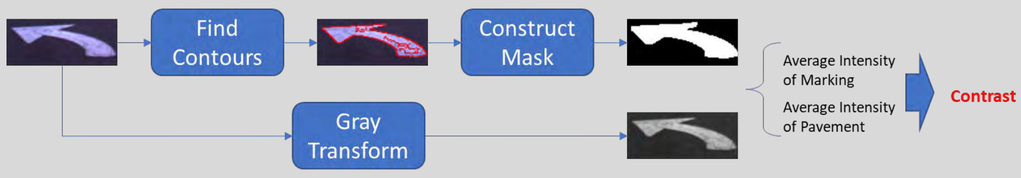

Following contents explain how to calculate the visibility score of an image patch that contains the pavement marking:

- Determine the contours of the pavement marking based on the contour tracing algorithm and dilation strategy;
- Detach the pavement marking from the surrounding pavement by assigning binary mask to fit for arbitrary marking shape;
- Compute the contrast between the pavement marking and the surrounding pavement as the visibility score according to the Weber contrast formula,

$$Contrast(M,P) = \frac{\overline{I_M} - \overline{I_P}}{\overline{I_P}}, \quad \overline{I_M} = \frac{\sum_{v \in Marking} I_v}{N_{Marking}}, \quad \overline{I_P} = \frac{\sum_{v \in Pavement} I_v}{N_{Pavement}}$$

Reference

[1] U.S. Department of Transportation Federal Highway Administration. Available online: https://www.fhwa.dot.gov/policyinformation/statistics/2018/hm15.cfm.
[2] GitHub Repository. https://github.com/microsoft/VoTT (archived in 2018).
[3] Redmon, J.; Divvala, S.; Girshick, R.; Farhadi, A. You Only Look Once: Unified, Real-Time Object Detection. In Proceedings of the IEEE Computer Society Conference on Computer Vision and Pattern Recognition; IEEE: 2016; Vol. 2016-Decem. https://doi.org/10.1109/CVPR.2016.91
[4] Redmon, J.; Farhadi, A. YOLO9000: Better, Faster, Stronger. http://pjreddie.com/yolo9000/
[5]Redmon, J.; Farhadi, A. YOLOv3: An Incremental Improvement. http://arxiv.org/abs/1804.02767