Data Management
CITDMCON

Provides students with advanced skills in the use, design, implementation, and programming of database

	Course	Prerequisites
1	CIT 27000 Intro to Java	P or C: CIT 21300 and CIT 21400
2	CIT 38800 Java Programming II	20000 level programming course
3	CIT 30400 Database Programming	20000 level programming course and CIT 21400
4	CIT 34400 Database Security	CIT 20300 and CIT 30400
5	CIT 44400 Advanced Database Design	CIT 21400
6	CIT 41200 XML-Based Web Applications	CIT 21200 and 20000 level programming
7	CIT 47900 Database Administration	CIT 34400
8	CIT 49900 Big Data Analytics	CIT 38800 Java

Data Management
2017 Term Plan with Prerequisites

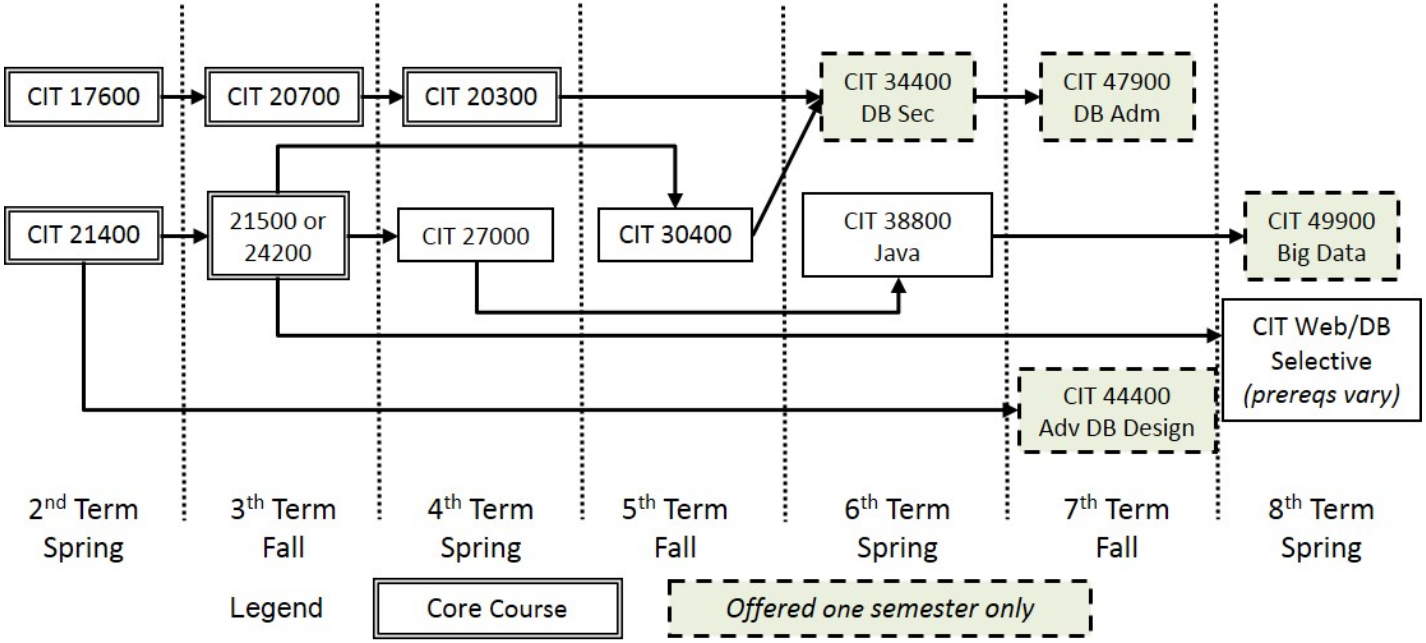

Effective Fall 2017